FSL FOSHAN ELECTRICAL AND LIGHTING

INDUSTRY WALL FAN



HIGH FUNCTIONALITY & DURABILITY

- Aluminum fan blades
- 2m power cord
- Low-noise operation
- Reinforced dense safety mesh
- Powerful airflow
- 10m long air reach

Features

* Air speed: 6 m/s ±10%
* Air flow: 4,100 CFM ±10%
* Air supply distance: 10m
* Colour: black & orange
* Up and down rotation angle: 15°
* Left and right rotation angle: 45° (Oscillating head)
* Acoustic noise: ≤75dB (A)
* Speed control method: knob switch (0-1-2-3)
* Product weight:
  Motor - 3.55kg, Mesh and Impeller - 3.31kg,
  Pole and Bracket - 5.57kg
* Operate maximum 12 hours
* 1 year warranty on motor
* Operation exceeding 12 hours requires a 30 minutes interval to extend the usage life.

Applications

Suitable for garages, basements, storage rooms, workshops, factories.

Warehouse Factory Garage

Dimension

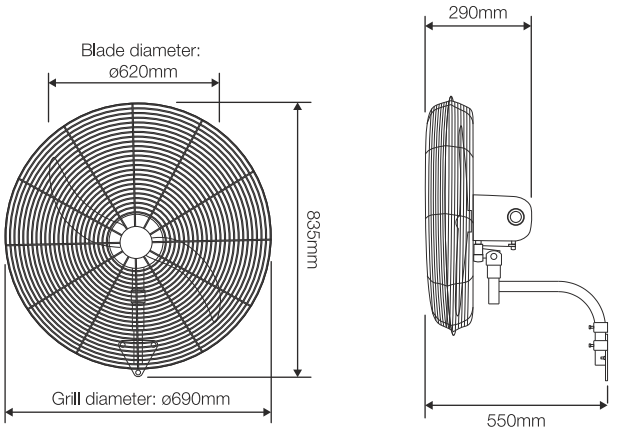





Code	Voltage	Power (W)	Rotational Speed (r/min)	Wind Speed (m/s)	Air Volume m³/H	Size (mm)	Motor Shaft (mm)	Packing Qty (pcs/ctn)
FS-65-2	AC220-240V	230W	1400	6	4100	120*26*65	17*185	1